StellaDoradus
Mobile Signal Booster manufacturers

iCombinerAmp iC6-EU

Control and monitor your CombinerAmp through the cloud

Amplify GSM , H+, 4G, 5G*

Cloud monitoring and control

Touch screen interface

Ships - Fleet vehicles - Search & rescue - Ambulance - Police

*Many operators transmit 5G at 700MHz

Diagrams

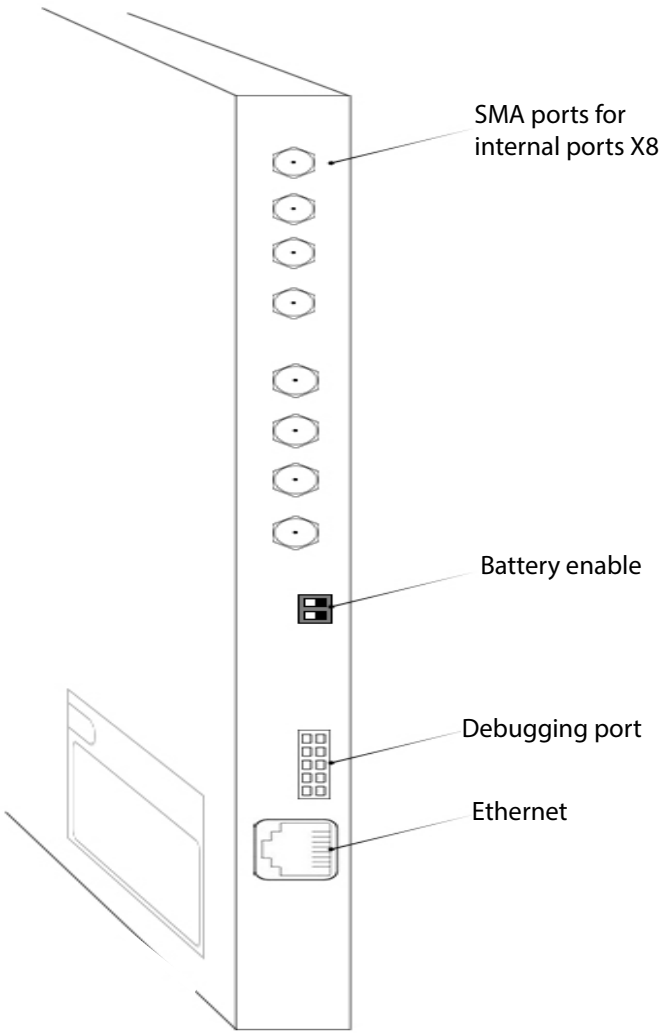

Half MIMO setup (MIMO on DL only)

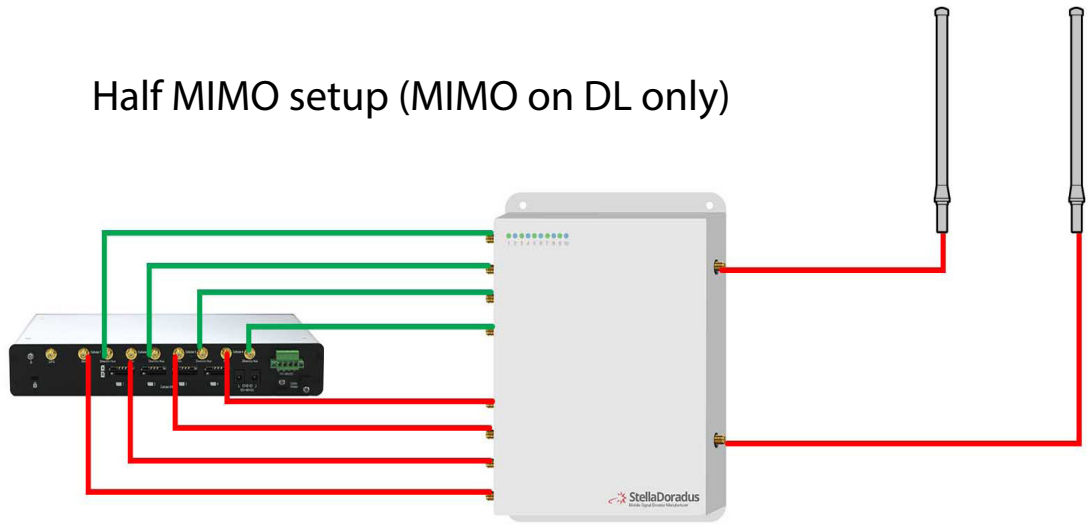

Full MIMO setup

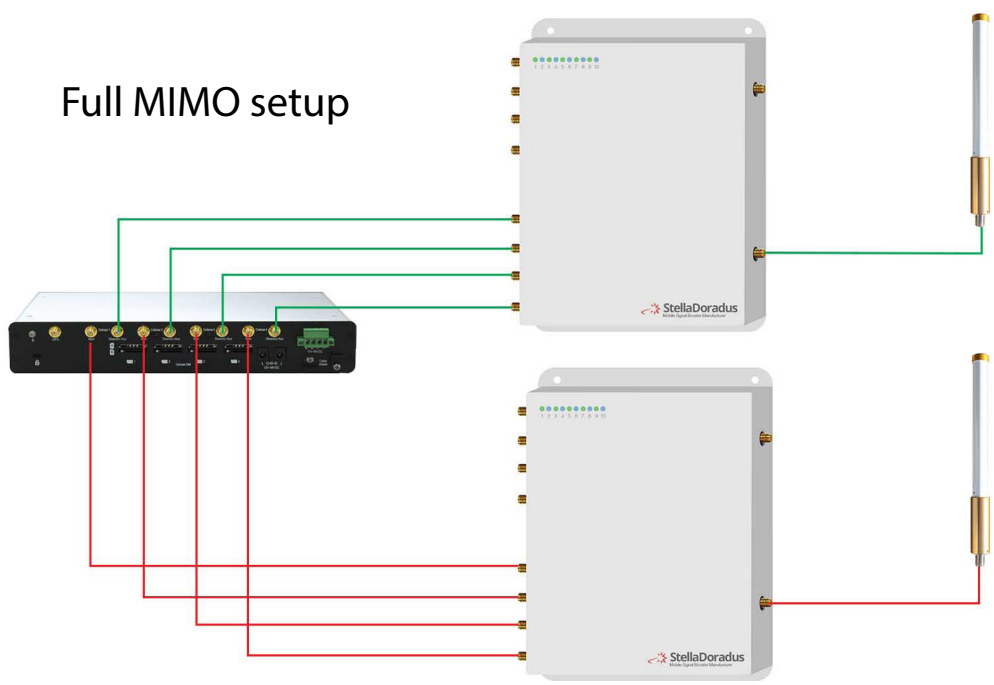

GSM/3G/4G routers

Cisco	Viprinet
HP	Peplink
Asus	TP-Link
Huawei	Teltonika
Siemens	Passari
Virtual Access.	

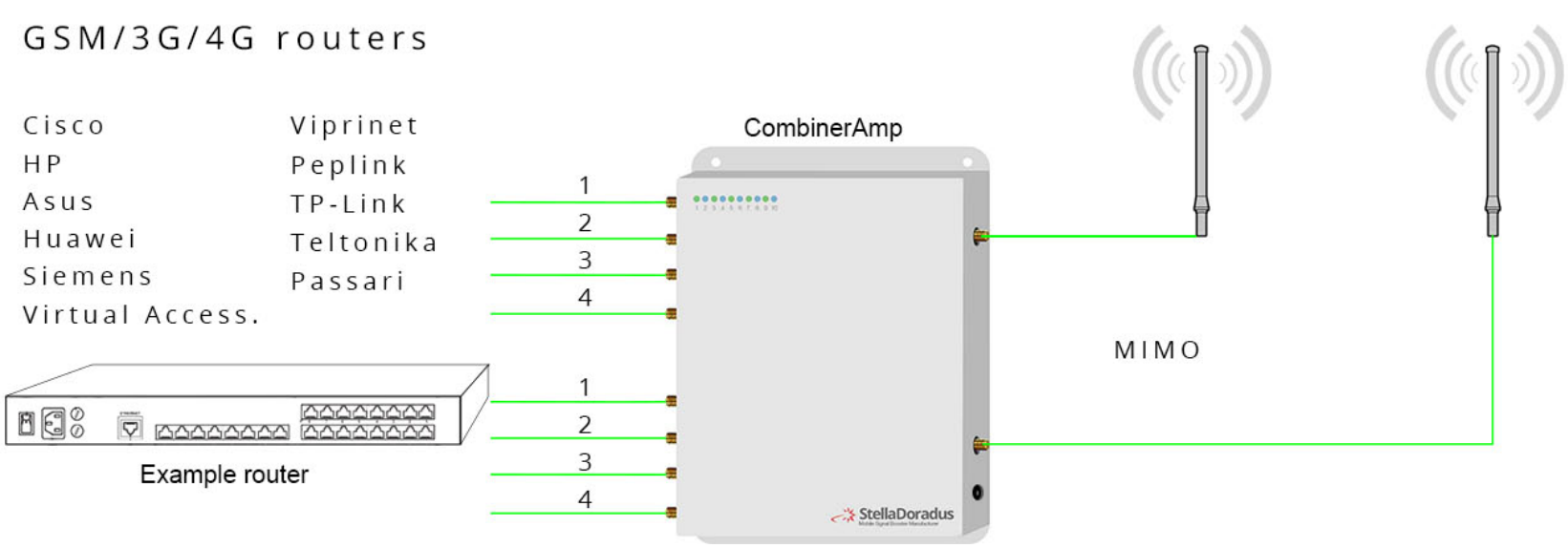

TouchScreen LCD Panel

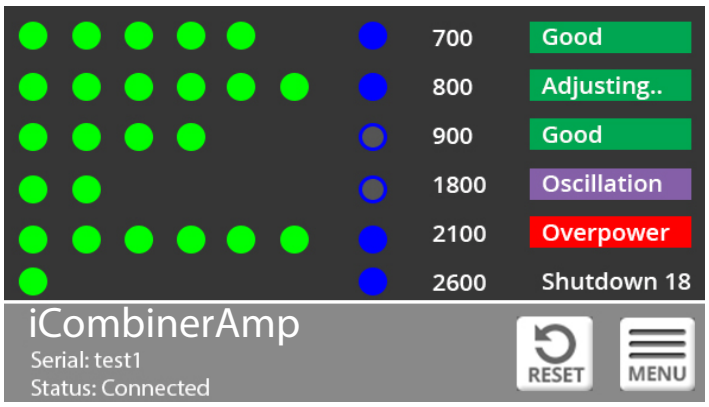

Main screen:

The green circles represent the downlink signal power (DL).

- 5-6 greeen circles means the signal is very good.
- 3-4 circles is a fair signal
- 1-2 circles is a poor signal.

The blue circles, when on, signify that this band is switched on and it is active. This will happen when a call or data session is initiated.
Once the call or data sessaion is over, the band switches off and the blue circle also switches off.

The coloured rectangles to the right.

Good:	means the band has no problems.
Adjusting:	means the band is optimizing itself. This usually happens only once at bootup and only if there is alot of DL power.
Oscillation:	means there is interferance between the indoor and outdoor antennas. You should isolate these antennas more from each other to avoid oscillation. (available on R6 only)
Overpower	means there is a very strong outdoor signal. There is no need to do anything in this case as the repeater will optimize itself to deal with this.
Shutdown:	means that there is too much signal power outside and the repeater is shutting down the band to protect the network.

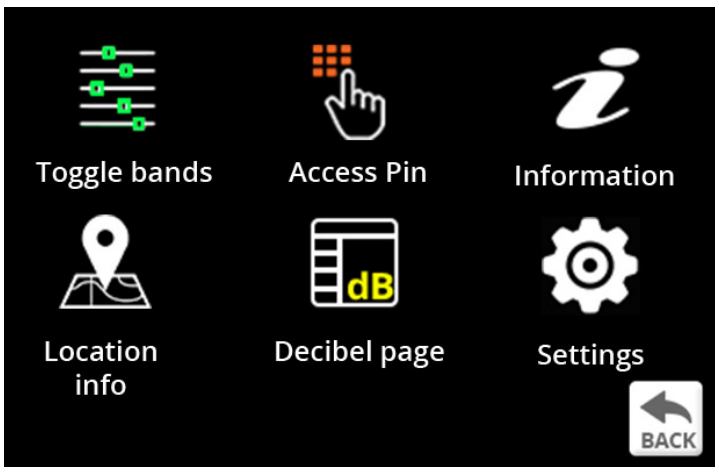

Main Menu

Toggle bands:	Switch on/off any band. Add attenuation to any band.
Access Pin:	Enter your pin to access more setttings
Information:	Information about the repeater.
Location info:	Here you can enter the internal location of the CombinerAmp inside the ship. This is usefull to see on the onine dashboard.
Decibel page:	The decibel page shows you detailed power and gain values of the repeater.
Settings:	Various settings in the CombinerAmp.

Decibel Page

Frequency (MHz)	700	800	900	1800	2100	2600
Power up (dBm)	-15	-15	-15	-15	-15	-15
Power dn (dBm)	-30	-30	-30	12	-30	-30
Phone up (dB)	5	5	5	5	5	5
Temp up/dn (dB)	0	0	0	0	0	0
Clamp(dB)	0	0	0	0	0	0
mgain (dB)			0	0	0	0
Max Osc (dB)	0	0	0	0	0	0
Total Loss dn	0	0	0	3	0	0

Power up:	This is the uplink power received by the repeater.
Power dn:	This is the downlink power received by the repeater. (Signal power from the outside antenna)
Phone up:	This is the uplink AGC for phones passing nearby internal antennas.
Temp up/dn:	This is the uplink and downlink AGC for when you are near a base station.
Clamp:	This is the extra attenuation added for when there is an oscillation.
mgain:	This is the manul gain. You can add your own attenuation to any band. Sometimes this is neccessary for when there is too much power on any one band.
Max Osc:	Uplink and downlink oscilation. Whichever is higher, is Max Osc.
Total loss:	This is a sum of the temp up/dn + clamp + mgain + max osc. This value can be entered into the stellacontrol floorplan tool to aid in designing repeater systems.

TouchScreen LCD Panel

Information Page

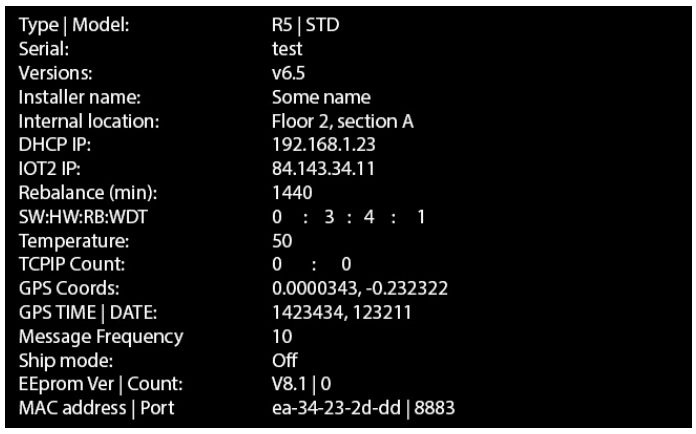

Type | Model:	R5 | STD
Serial:	test
Versions:	v6.5
Installer name:	Some name
Internal location:	Floor 2, section A
DHCP IP:	192.168.1.23
IOT2 IP:	84.143.34.11
Rebalance (min):	1440
SW:HW:RB:WDT	0 : 3 : 4 : 1
Temperature:	50
TCPIP Count:	0 : 0
GPS Coords:	0.0000343, -0.232322
GPS TIME | DATE:	1423434, 123211
Message Frequency	10
Ship mode:	Off
EEprom Ver | Count:	V8.1 | 0
MAC address | Port	ea-34-23-2d-dd | 8883

Type | Model:	Type (iC6-EU), Model standard
Serial:	XX-XX-XX
Version:	Software version.
Installer name:	You can enter your company name from the onlin dashboard.
Internal location:	Here you can put in the location of the CombinerAmp inside the ship.
DHCP IP:	Local IP address
IOT2 IP:	Cloud IP address
Rebalance (min):	This is how often the CombinerAmp will reset / optimize itself.
SW:HW:RB:WDT	These are counters for these occurances: software resets, hardware resets(power removed), rebalances and watch dog timer resets.
Temperature:	Temperature inside the repeater in degrees.
TCPIP Count:	A metric for the quality of the internet connection.
GPS Coords:	The location of the repeater can be know and represented on a map.
GPS TIME | DATE:	Local time and date can be retrieved from the GPS module.
Message Frequency	How oftern a message is sent by the repeater to the server.
Ship mode:	If ship mode is enabled, this repeaters' settings will be modified for this mode.

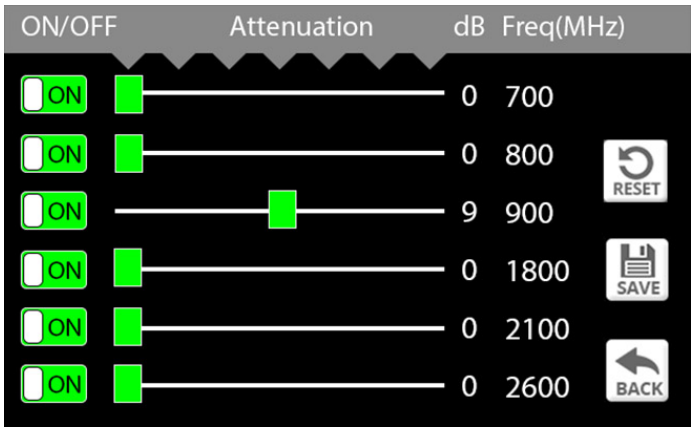

Toggle Bands:

Here we can switch on/off any or all bands. This can be usefull when optimizing a repeater.
For example, we can switch off 2600MHz to force 4G data to use 800 and 1800MHz.

We can add attenuation to any band. This can be usefull if we have a particular band that is experiencing alot of power.

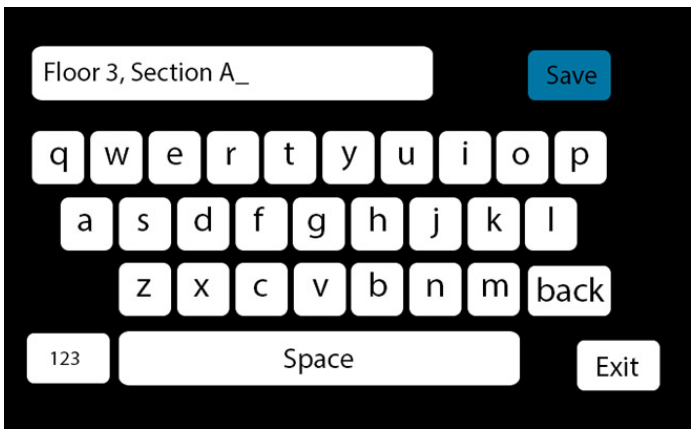

Internal location:

Here you can input the internal location of the CombinerAmp.
Example: Floor3, sectionA, near stairs.
This location information is sent to the online dashboard where it can be viewed alongside other stats about the CombinerAmp.

Online Dashboard Panel

Login to:

www.stellacontrol.com

1) Create a new ship and add your new device(s) to your new ship.

2) Now you can monitor and control all your ships/vehicles and devices.

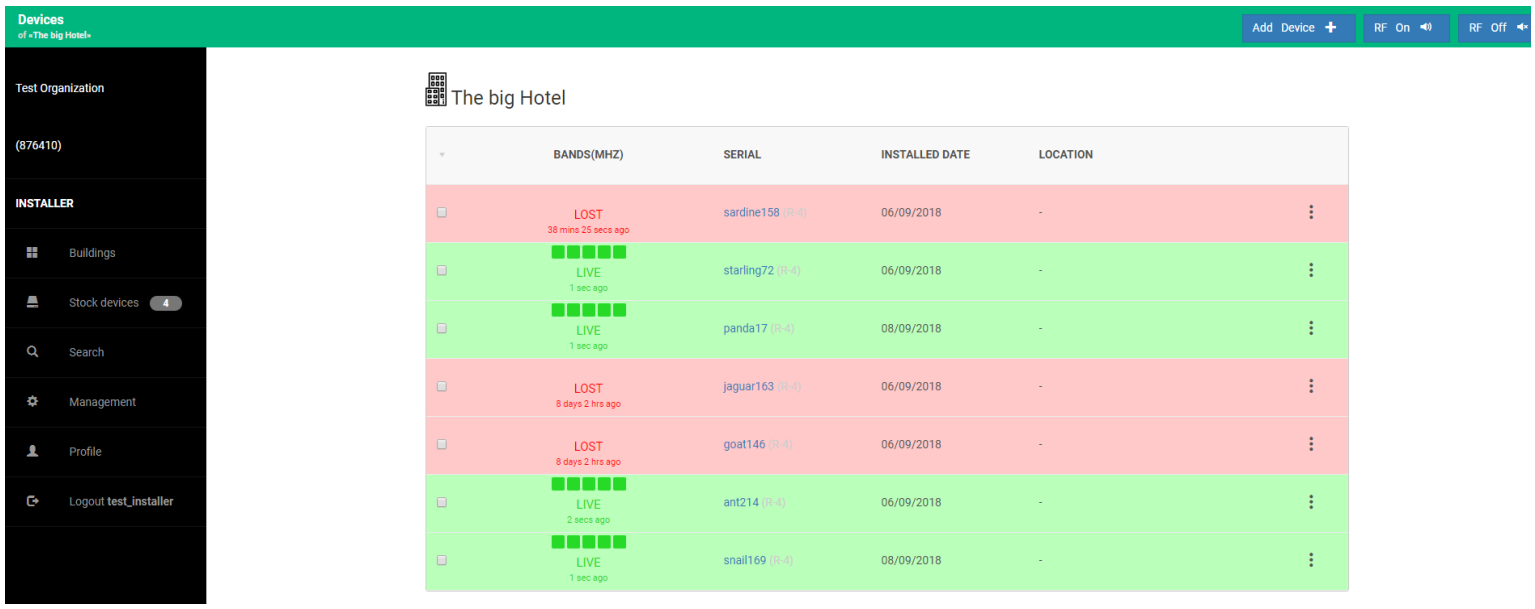

This image shows several devices installed in "the big hotel", all being monitored

Alerts:

- Get alerted by email if there is any issues with your devices.

Remote Control from any computer/ phone:

- Switch On/Off, individual bands of any CombinerAmp.
- Switch off RF for one or all devices in a ship.
- Attenuate individual bands in any repeater by up to 18dB's.

Monitor:

- Up/Downlink Power
- Up/Downlink Gains
- Up/Downlink AGC
- Up/Downlink Oscillations/feedback
- Temperature on PCB board

StellaDoradus
Mobile Signal Booster manufacturers

Specification

Model number:	iC6-EU
Frequency	700/800/900/1800/2100/2600
Remote monitoring:	✓

Frequency Specifications:

Frequency bands(Mhz):	(703-788) + (791-862) + (880-960) + (1710-1880) + (1.92-2.17) + (2500-2690)
Gain:	Uplink Gp > 15dB Downlink Gp> 15dB
Pass band ripple:	< 4dB
I/O impedance:	50 ohm/SMA female connector
Max uplink/downlink signal strength:	
-Multiple radio cards:	24dBm / -25dBm
-Single radion card:	27dBm / -25dBm
Ambient Temperature:	-30°C to +70°C
Power supply input:	110 - 240V AC
Power supply output:	12v DC
Oscillation Control	Automatic
Level Control:	Automatic*
Uplink Switch Off	Yes**
AGC Range	30db
Surge protection	SMA connectors DC grounded, 12V DC port MOV protected

Power Supply Specification:

AC	100-240V	50-60Hz
DC input	12V	7A
Typical power usage		84W

Mechanical Specification:

Length	41cm
Width	30.6cm
Depth	4.7cm
Weight	2kg
Mounting	6 x 5mm holes for mounting

* Automatically adjusts during installation. Thereafter, automatically adjusts for seasonal variation in pathloss between basestation and outdoor antenna.

** The up-link amplifiers switch off when the repeater is not in use. This reduces the uplink noise to almost zero. When the repeater is in use (eg. phone call being made), the up-link amplifier switches on for the duration of the call and a blue LED switches on indicating this is the case.

Note: Specifications subject to change without notice.